PHOTON inc
Light Measurement Solutions

BeamScan Scanning Dual Aperture Instrument Operation

Elliptical Beam Example

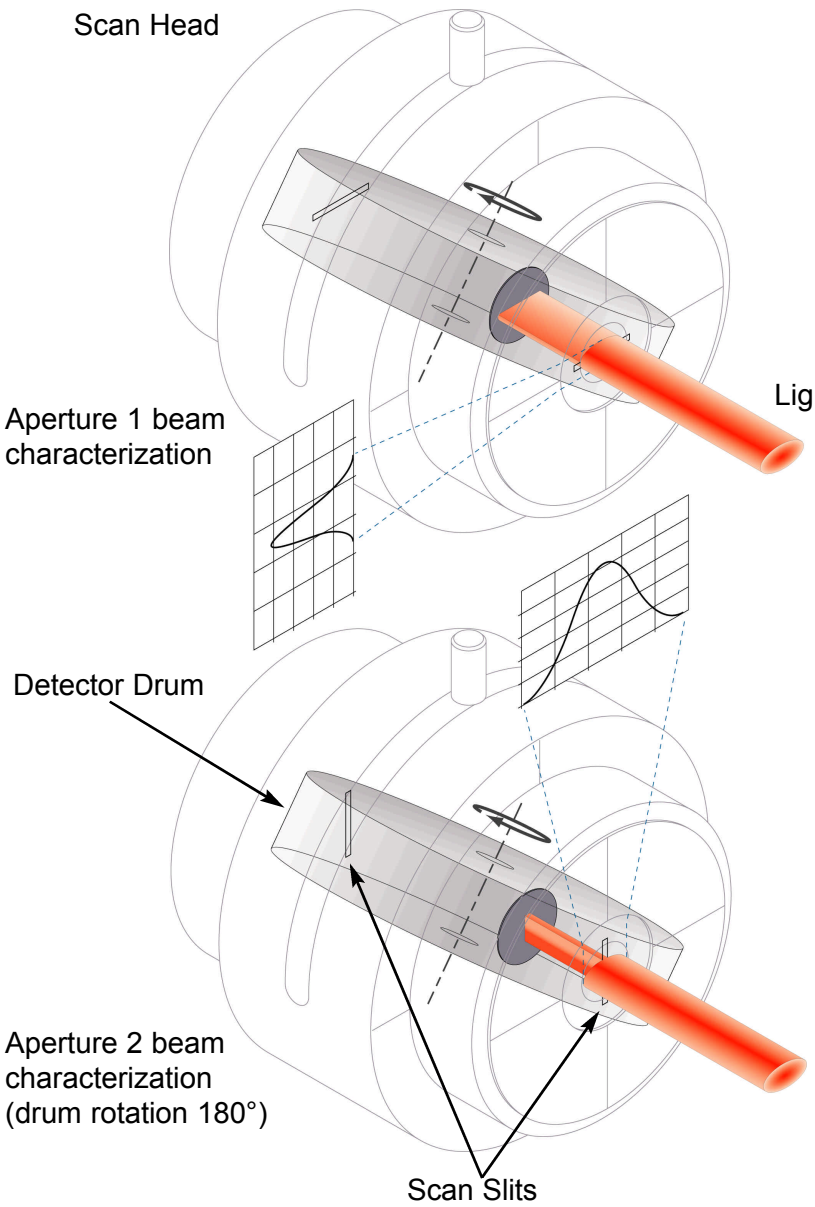

Using feedback from a position encoder, the PLL (phase-locked loop) controlled motor provides precision rotation of the dual orthogonal scan slits enabling ultra-fine (up to 0.14 µm) beam sample resolution.

As the scanning slit cuts across the beam, light passes through the aperture to the detector. Current flow from the detector is proportional to the power of the incident light.

Current from the detector passes to a high-precision current-to-voltage converter and amplifier.

This measurement is then displayed as a graph of precision output voltage vs. time and distance.

©2001 Photon inc.